2 years WARRANTY

VWA1210

EAN: 5603209012109

45″-55″

2 DISPLAYS

KG 50 MAX. (DISPLAY)

CABLE MANAGEMENT

VESA 600x400 MAX.

VIDEO CONFERENCE

DISPLAYS 45-55″

HIGH-END BRAKED WHEELS

ADJUSTABLE FEET

TILT +5º -10º

TOTAL HEIGHT: 1720MM

INTEGRATED CABLE MANAGEMENT
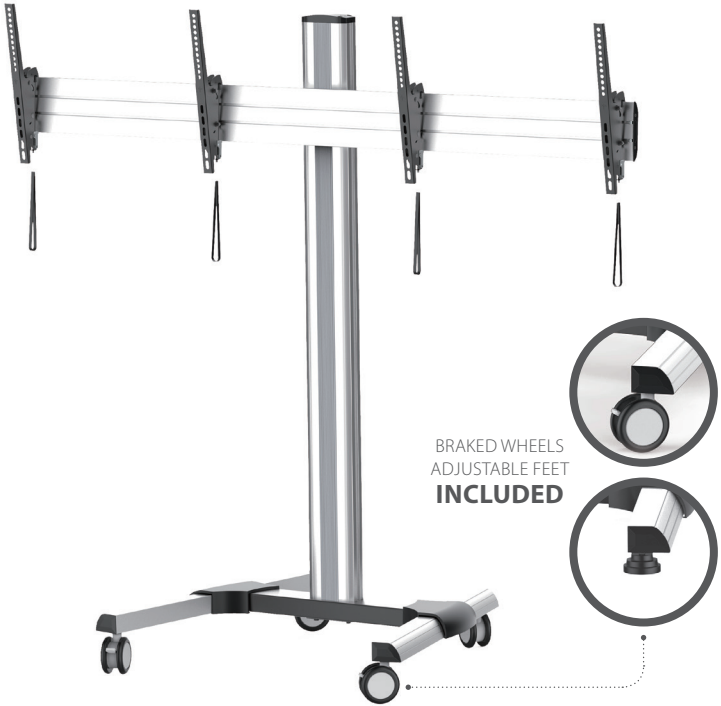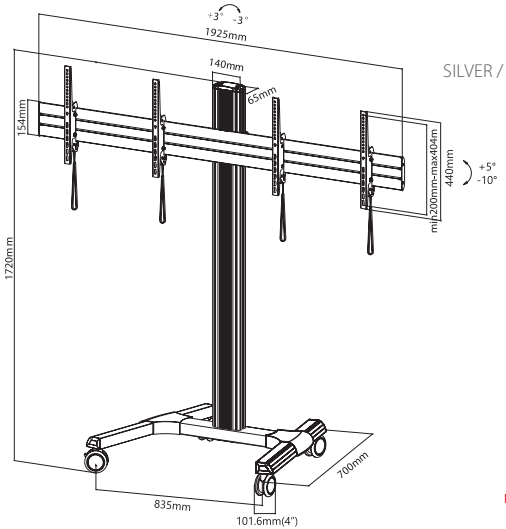
SILVER / BLACK COLOR